JS1 REVELATION

2011 Specification

The JS1-B Revelation is a high-performance FAI 18m Class sailplane, fully-equipped in its baseline standard.

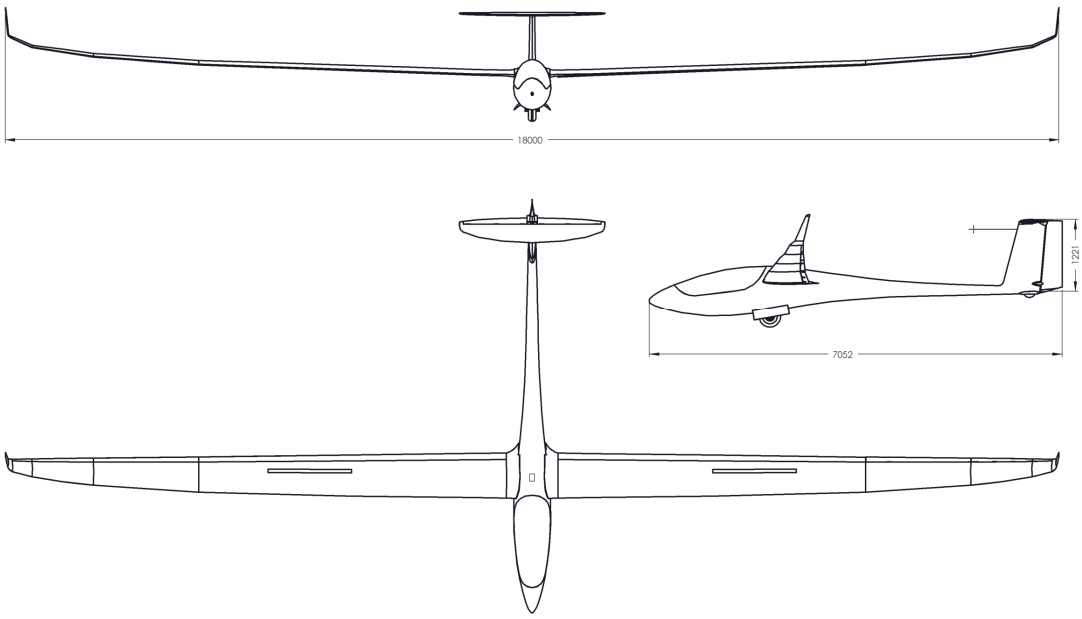

Technical Data

Wing Span	18.00 m	59.05 ft
Wing Area	11.2 m^2	120.56 ft^2
Aspect Ratio	28.8	
Fuselage Length	7.165 m	23.51 ft
Fuselage Height	1.32 m	4.33 ft
Empty Weight	310 kg	684 lbs
Maximum Weight	600 kg	1323 lbs
Wing Loading (min, 70kg pilot)	33.9 kg/m^2	6.94 lb/ft^2
Wing Loading (max)	53.3 kg/m^2	10.92 lb/ft^2
Best Glide Ratio	1:53	
Minimum Sink Rate at 400 kg	0.5 m/s	100 ft/min

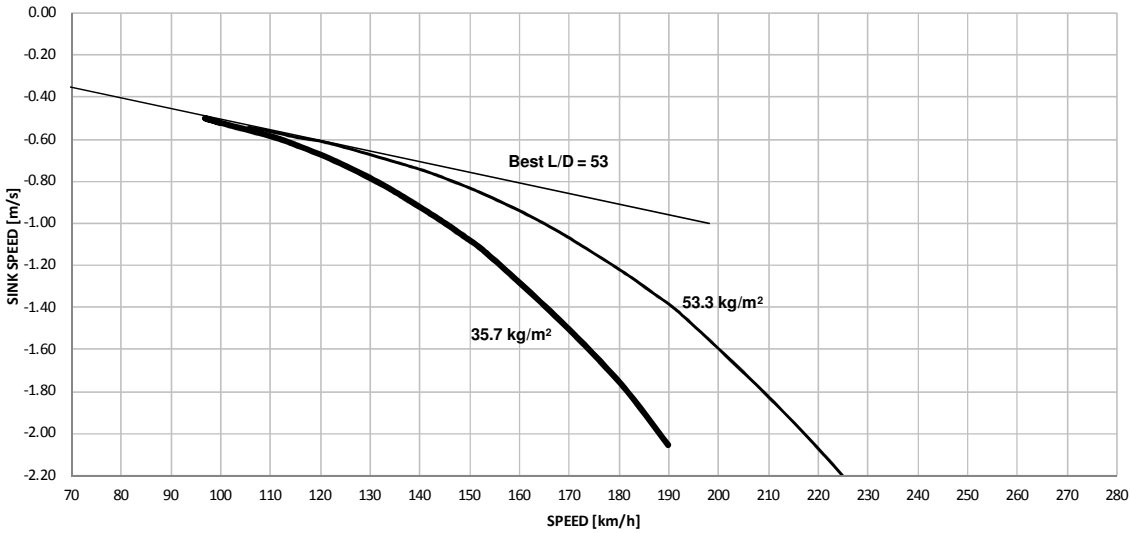

JS1-B Revelation Standard Features

- Four-piece, polyhedral, multi-tapered wing with removable wingtips (with integral winglets) and full span flaperons
- Triple-panel upper-surface airbrakes
- Fully automatic control connections for flaperons, airbrakes and elevator
- All control surface gaps on wing, tailplane, and vertical stabiliser sealed with Teflon/Mylar tape
- Boundary layer control with blowholes and soft tripping turbulators
- Comfortable safety cockpit, with state-of-the-art carbon/aramid construction and integral crumple zones
- Elevator trim with sprung-loaded control/position indicator on sidewall with thumbscrew lock
- In-flight adjustable rudder pedals
- Retractable undercarriage with elastomeric shock absorbers and over-centre locking
- Goodyear™ Flight Special II speed-rated tyre and Cleveland™ 5.00x5 aluminium wheel
- Cleveland™ hydraulic disc brake activated by full aft travel of airbrake handle
- Fixed 210x65 pneumatic tail wheel
- Removable wing-tip wheel fairings and racing skids/tie-down plates
- TOST™ nose release hook
- Provision for C.G. belly hook enclosed by main wheel doors
- Integrated main water ballast tanks (approximately 2 x 93 litres) in wings with automatic coupling, maintenance-free valves
- Integrated C.G. ballast tank & jettisonable water ballast tail tanks in vertical stabiliser
- Flush-mounted brass fill points for tail ballast tanks
- Painted external markings with standard font (customer specified registration & contest numbers)
- Forward opening tinted canopy with integrated instrument panel
- Canopy hinged with dual gas-struts for improved balancing
- Flexible cable conduit to instrument binnacle with colour-coded pitot, TE, and static tubes
- Canopy emergency jettison with safety hook at aft edge of frame
- Canopy side window (sliding DV panel) with scoop vent
- Moulded lifting handle on canopy rail at side window
- Forward canopy defogging vent with honeycomb flow straightener
- Adjustable ball cockpit vent (black anodised aluminium alloy)
- Four-point safety harness with quick-release buckle
- Adjustable backrest with headrest
- Energy-absorbing seat cushion
- Non-sweat cloth upholstery material with storage side pockets
- Oxygen storage tube with cylinder retainer bracket for 248 litre capacity oxygen bottle
- Control stick leather boot
- CAD modelling & CNC machining of instrument panel layout to customer specification
- Installation of purchased instruments: ASI, altimeter, mechanical variometer, radio, electronic variometer, and navigation systems
- Gooseneck dynamic microphone
- Stick mounted PTT switch and twin speakers
- Stick mounted cruise/climb toggle switch or flap-driven cruise/climb micro-switch
- Two recessed battery boxes in baggage compartment and battery compartment in vertical stabiliser
- Two high-capacity 7Ah main batteries with fuses fitted (charger excluded)
- One 7Ah fin battery with fuse fitted (charger excluded)
- ESA TE multi-probe (pitot, static pressure and Total Energy)
- Static pressure vents (for airspeed indication) in fuselage tail boom
- Radio antenna in vertical stabiliser
- Full provision for transponder antenna installation inside vertical stabiliser
- External finish in sanded and polished urethane 2K paint

- All metal components with aerospace grade cadmium plating corrosion protection
- Aircraft Flight Manual and Maintenance Manual
- Tail dolly
- Tool bag
- JS universal rigging tool
- Airbrake locking lever
- Eccentric pin to assist rigging
- Canopy cover with integral storage bag
- Certificated to CS-22 Airworthiness Standard
- Delivered in rigged or de-rigged condition, ex-works

JS1-B Revelation 2011 Specification Price
€75 000

The 2011 JS1-B Revelation standard specification is a fully-equipped sailplane, requiring only instruments & avionics, a parachute, and a trailer for a complete kit.

Jonker Sailplanes provides separate quotations for instruments & avionics, aiming to provide competitive market pricing with minimal mark-up. Instrument & avionics installation is included in the standard specification (excluding installation of transponder and ELT, or customer supplied instruments).

Note: Some prices are either TBD (to be determined) or POA (price on application and requiring a specific quotation). All prices are without value added or sales tax. Prices may change without notice.

Options, Extras, and Other Equipment

Jet turbine sustainer system	POA
Clear (untinted) canopy	€100
Leather cockpit interior	POA
TOST™ C.G. release hook	€550
Transponder antenna & cabling installation	€325
JS Louvred Cockpit Air Extractor	€2,500
Bug wipers (with fuselage recesses)	€500
Bug wiper electronic control system	€990
Brass tailwheel hub (instead of Vesconite)	No cost
Additional tailwheel hub (Vesconite or brass)	€290
Solar panel (7.5W, inset into engine bay cover)	€650
Anti-collision markings (luminescent paint)	€990
All-weather covers – complete aircraft	€1,825
Hangar dust covers – complete aircraft	€930
Wing walker	€300
Wing stand (each)	€120
Tow-out bar	€220
SA CAA Certificate of Airworthiness & registration	€825

Contact Details

Jonker Sailplanes

Hangar 22 & 23, Potchefstroom Airfield, 1 Tiger Moth Street, Potchefstroom, South Africa

Uys Jonker		Iain Baker	
Email:	uys@jonkersailplanes.co.za	Email:	iainzbaker@jonkersailplanes.co.za
Tel:	+27 182 851035	Mobile:	+44 7776 134999
Mobile:	+27 833 774623		

There are authorised JS agents based in the USA, UK, the Netherlands, Denmark, Australia and New Zealand:

USA & Canada (and currently also Central & South America)

Leo Benetti-Longhini		Jen Benetti-Longhini	
Email:	info@jonkersailplanes.com	Email:	info@jonkersailplanes.com
Tel:	+1 931 455 5994	Tel:	+1 931 455 5994
Mobile:	+1 931 434 3434	Mobile:	+1 931 434 6246

Western Europe: UK, Ireland, France, Spain & Portugal

Iain Evans		Andy Davis	
Email:	iain@shirenewton.co.uk	Email:	paminandy@compuserve.com
Tel:	+44 1531 670522	Tel:	+44 1453 860945
Mobile:	+44 7905 233868	Mobile:	+44 7850 129450

Central Europe: Netherlands, Belgium, Luxembourg, Germany, Austria, Switzerland, Italy (and currently also Eastern Europe)

Maarten Baltussen		Ronald Termaat	
Email:	info@glider-import.com	Email:	info@glider-import.com
Tel:	+31 555 053148	Tel:	+31 263 515916
Mobile:	+31 650 815736	Mobile:	+31 614 019198

Scandinavia: Denmark, Finland, Sweden & Norway

Arne Boye-Møller	
Email:	arne@boye-moller.dk
Tel:	+45 75 500002
Mobile:	+45 29 222373

Australia & New Zealand

Todd Clark		Brett Hunter	
Email:	toddclark@hotmail.com	Email:	hunter.b@ihug.co.nz
Tel:	+61 267 669109	Tel:	+64 75766962
Mobile:	+61 409 386667	Mobile:	+64 21927626

Uys Jonker and Iain Baker are handling inquiries outside Europe, the Americas, Australia and New Zealand.

The factory pricing structure is identical for all sales regions with cost differences due only to delivery expenses, local taxes, registration fees, etc.